REV.	ECN NO.	LOCATIONS	DESCRIPTION	DATE	DESIGN
A0			NEW RELEASE	05/28'19	Larry

CUSTOMER DRAWING

RoHS Compliant

ORDERING INFORMATION

SDES - Z01 (XX T)
1 2 3

1 PRODUCT SERIES
SD CARD CONNECTOR-
EASY STANDARD TYPE.

2 ITEM NO.
SMT TYPE/2.80H

3 GOLD PLATING
01: G/F.

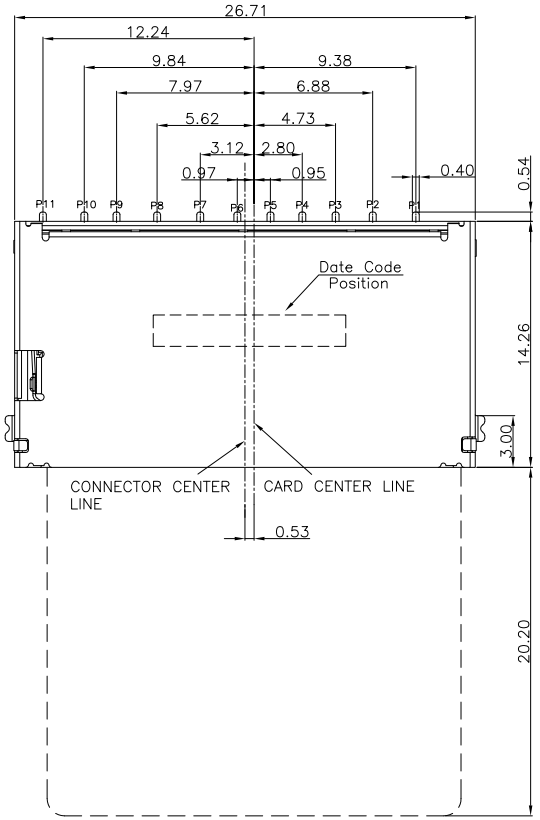

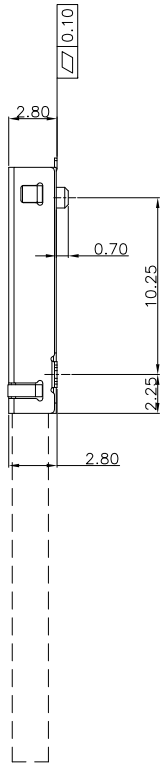

3D VIEW

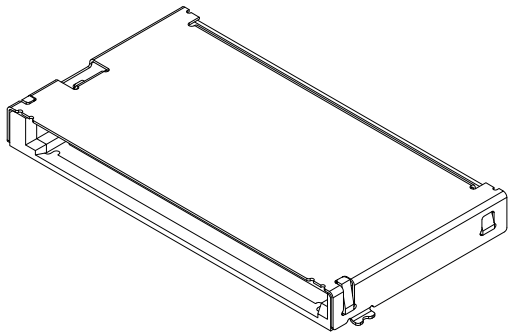

Pin Define

Connector Pin No.	SD Card Pin No.	Pin Define
P1	P9	DAT2
P2	P1	DAT3
P3	P2	CMD
P4		CD
P5	P3	VSS1
P6	P4	VDD
P7	P5	CLK
P8	P6	VSS2
P9	P7	DATO
P10	P8	DAT1
P11		W/P
P12~P13		GND

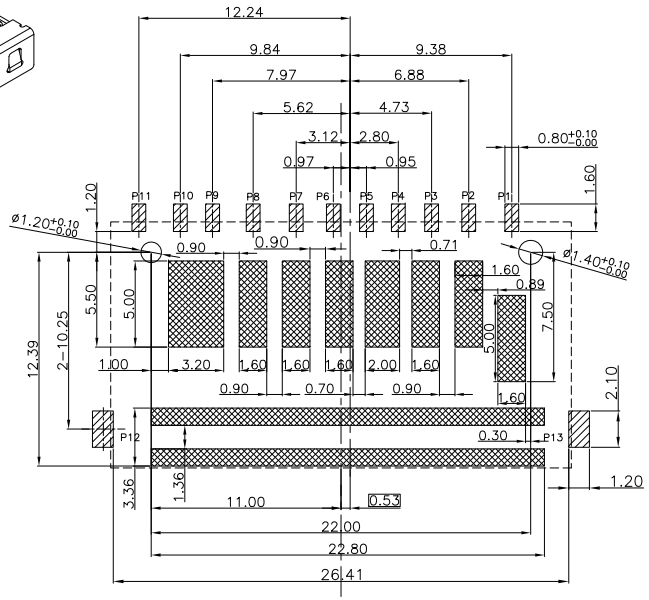

RECOMMENDED PCB LAYOUT
GENERAL TOLERANCE:±0.05

PAD

No trace , no test point, no via hole, no ground area

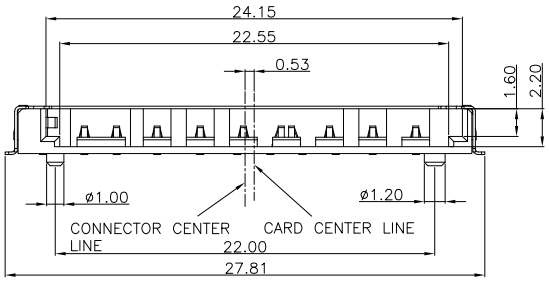

WITHOUT CARD	CARD INSERTED:LOCK	CARD INSERTED:UNLOCK
W/P GND	W/P GND	W/P GND
C/D VSS1 P3	C/D VSS1 P3	C/D VSS1 P3

NOTES:

1.MATERIAL:
- HOUSING: HIGH TEMP, UL94V-0.
- CONTACT: COPPER ALLOY.
- SHELL: STAINLESS STEEL.

2.FINISH:
- CONTACT: GOLD PLATED ON CONTACT AREA. OVER NICKEL PLATED OVERALL.
- SHELL: NICKEL PLATED OVERALL.

DIM	TOL	DIM	TOL
X.X	±0.35	X.X°	±3.0°
X.XX	±0.25	X.XX°	±2.0°
X.XXX	±0.15	X.XXX°	±1.0°

SUNFUN	SUNFUN TECHNOLOGY LTD			
DRAW NO.	SDES-Z01(A0)	DATE	MATERIAL: SEE NOTES	DRAW NAME: SD CARD CONN-EASY STANDARD/ SMT TYPE/2.80H
DESIGN:	Larry	05/28'19	FINISH: SEE NOTES	
CHECK:	Larry	05/28'19	FILE: SDES-Z01(A0)	MODEL: SD CARD EASY
REVIEW:	Ziv	05/28'19	P/N: SDES-Z01(XXT)	UNIT: mm / SHEET: 1/1
APPROVED	Ziv	05/28'19	REV. A0 / SCALE	